TOP AND CABINET PARTS

For Model: WTW5300SQ0
(White)

AUTOMATIC
WASHER

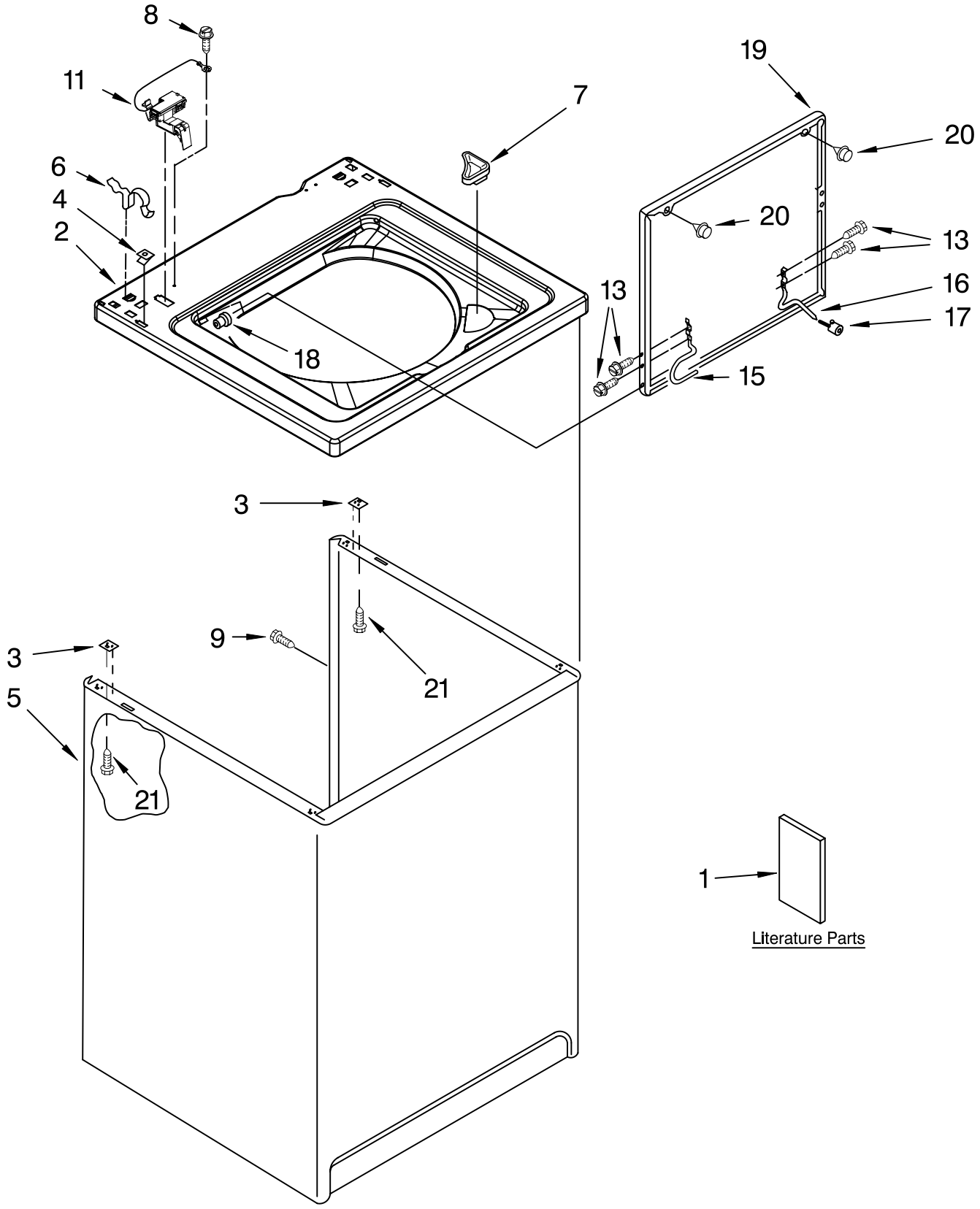

FOR ORDERING INFORMATION REFER TO PARTS PRICE LIST

TOP AND CABINET PARTS

For Model: WTW5300SQ0
(White)

Illus. No.	Part No.	DESCRIPTION
1		Literature Parts
	W10044800	Installation Instructions
	3957874	Feature Sheet
	3955884	Use & Care Guide
	8578910	Wiring Diagram
	W10023640	Energy Guide

Following May Be Purchased

DO−IT−YOURSELF REPAIR MANUALS

	4313896	Manual, Do−It Yourself (Washer)
2	8318064	Top
3	62750	Spacer, Cabinet To Top (4)
4	357213	Nut, Push−In (2)
5	63424	Cabinet
6	62780	Clip, Top & Cabinet & Rear Panel (2)
7	3362952	Dispenser, Bleach
8	3351614	Screw, Ground
9	3357011	Screw, 10−16 x 1/2
11	8318084	Switch, Lid
13	3351355	Screw, Lid Hinge Mounting (4)
15	8318088	Hinge, Lid (L.H.)
16	54583	Hinge, Lid (R.H.)
17	19119	Bumper, Lid Hinge
18	21258	Bearing, Lid Hinge (2)
19	8580061	Lid
20	9724509	Bumper, Lid (2)
21	3390631	Screw, 10−16 x 3/8 (4)

CONTROLS AND REAR PANEL PARTS

For Model: WTW5300SQ0
(White)

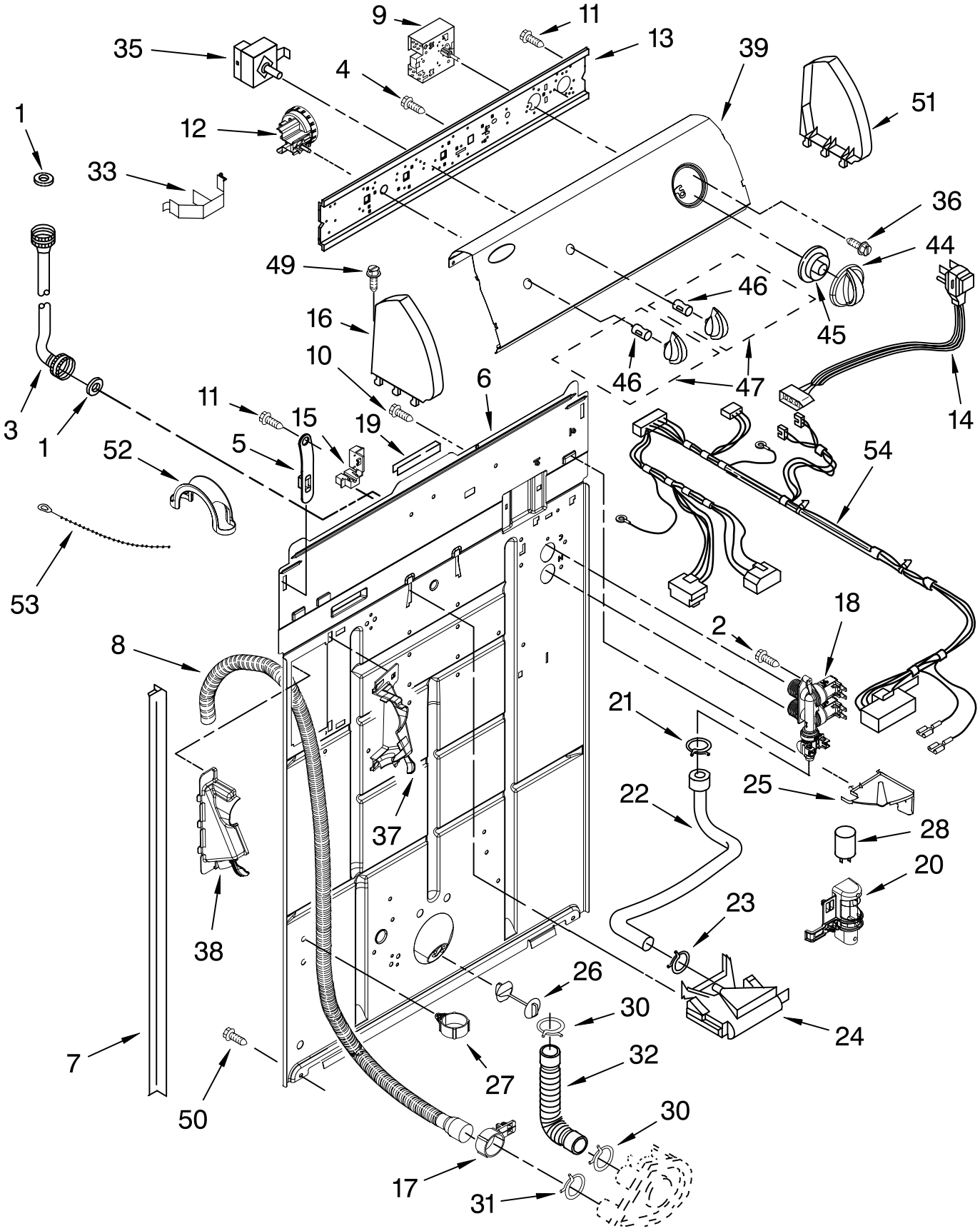

FOR ORDERING INFORMATION REFER TO PARTS PRICE LIST

CONTROLS AND REAR PANEL PARTS

For Model: WTW5300SQ0
(White)

Illus. No.	Part No.	DESCRIPTION
1	3976300	Washer, Water Inlet Hose (4) (1−1/16 x 5/8)
2	9740848	Screw, 8−18 x 1/2
3		Hose, Water Inlet (2)
	8571377	Blue Coupler
	8571378	Red Coupler
4	3400073	Screw, Ground
5	8568314	Strap, Console (2)
6	8318015	Panel, Rear
7	62747	Pad, Rear Panel
8	8559373	Drain Hose Assembly (Includes Items 17 & 27)
9	8546685	Timer, Control (60 Hz.) (Motor Not A Service Part)
10	3351614	Screw, Ground
11	90767	Screw, 8−18 x 3/8
12	8577845	Switch, Water Level
13	8544893	Bracket, Control
14	3956162	Cord, Power (Includes Item 15)
15	3952821	Strain Relief, Power Cord
16	8271365	Cap, End (L.H.)
17	8541668	Clamp, Hose
18	8578341	Valve, Water Inlet W/Bi−Metal
19	303294	Edge Protector
20	8318046	Clip, Capacitor
21	301958	Clamp, Hose
22	8317974	Hose, Vacuum Break
23	370450	Clamp, Hose
24	387606	Break, Vacuum
25	8539874	Shield, Suds
26	8519200	Support, Rear Panel
27	8541667	Clamp, Hose
28	8572717	Capacitor, Motor Start
30	3363366	Clamp, Hose
31	8317496	Clamp, Hose
32	3951449	Hose, Pump To Tub (Includes Item 30)
33	8055003	Clip, Harness & Pressure Hose
35	8578337	Switch, Water Temperature
36	3400818	Screw, Timer Mounting
37	8541669	Bucket, Drain Hose (Left Half)
38	8541658	Bucket, Drain Hose (Right Half)
39	8578801	Panel, Console
44	8566022	Knob, Timer
45	8566018	Dial, Timer
46	8536939	Clip, Knob
47	8565944	Knob, Control
49	388326	Screw, 8−18 x 1.25 (Panel to Top)
50	62863	Screw, 10−16 x 3/8
51	8271359	Cap, End (R.H.)
52	8577378	U−Bend, Drain Hose
53	3347868	Cable Tie
54	3958079	Wiring Harness (For Detail See Pages 9 & 10)

AGITATOR, BASKET AND TUB PARTS

For Model: WTW5300SQ0
(White)

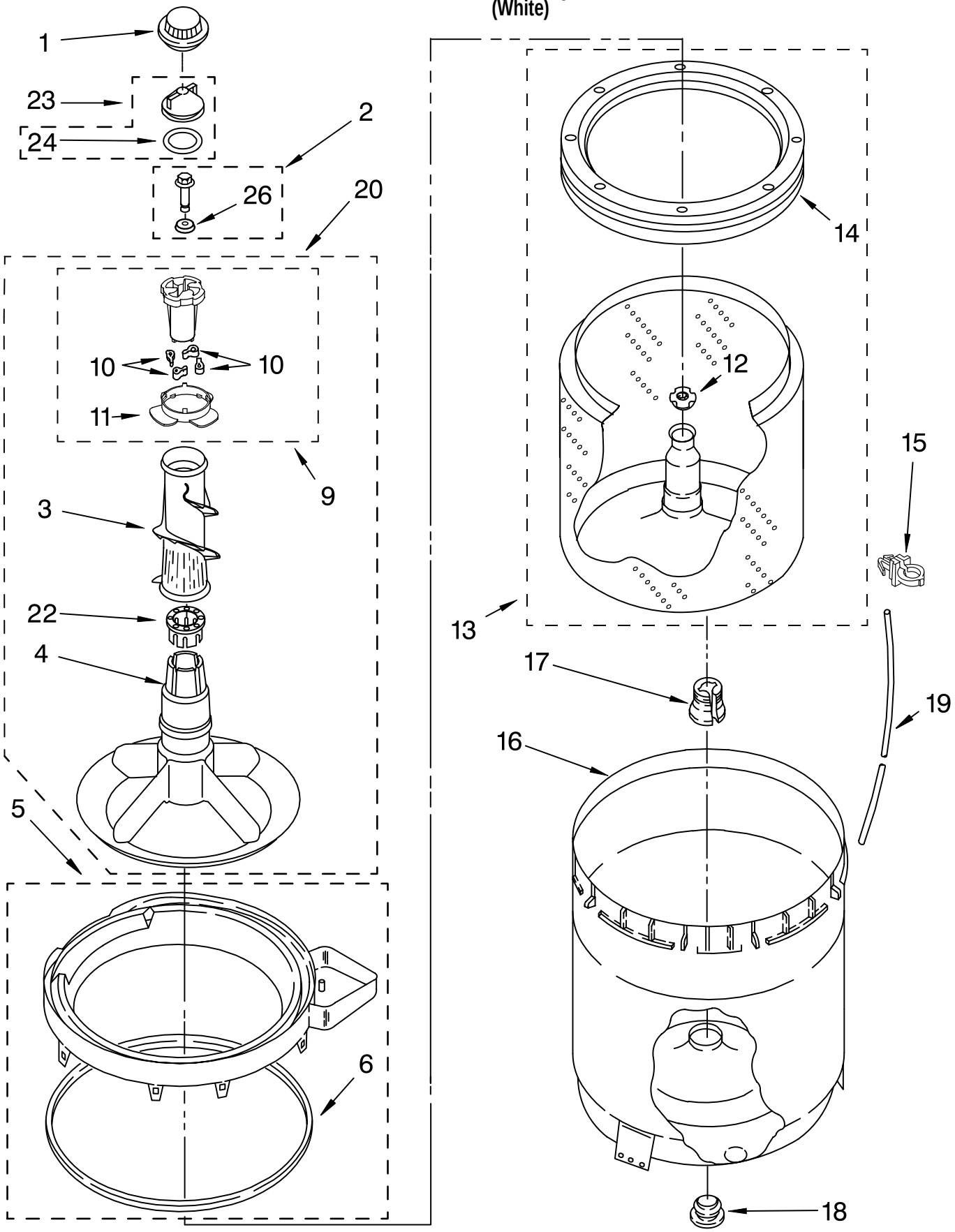

FOR ORDERING INFORMATION REFER TO PARTS PRICE LIST

AGITATOR, BASKET AND TUB PARTS

For Model: WTW5300SQ0
(White)

Illus. No.	Part No.	DESCRIPTION
1	3355758	Cap, Agitator
2	358237	Screw & Washer (5/16−24 x 1)
3	3348752	Clothes Mover
4	3347288	Agitator
5	8528150	Tub Ring & Gasket
6	3976308	Gasket, Tub Ring
9	3363663	Cam, Driven
10	3366877	Dog, Agitator Clutch (4)
11	3363661	Bearing, Cam Driven
12	21366	Nut, Spanner
13	8526017	Basket & Balance Ring
14	8519788	Balance Ring
15	2219077	Clip, Pressure Switch Hose
16	63849	Tub
17	389140	Block, Basket Drive
18	383727	Gasket, Centerpost
19	3347780	Hose, Pressure
20	3348117	Agitator (Complete)
22	3350389	Spacer−Thrust
23	3354733	Cap, Barrier
24	3348855	Seal−Inner Cap
26	3949550	Washer

BRAKE, CLUTCH, GEARCASE, MOTOR AND PUMP PARTS

For Model: WTW5300SQ0
(White)

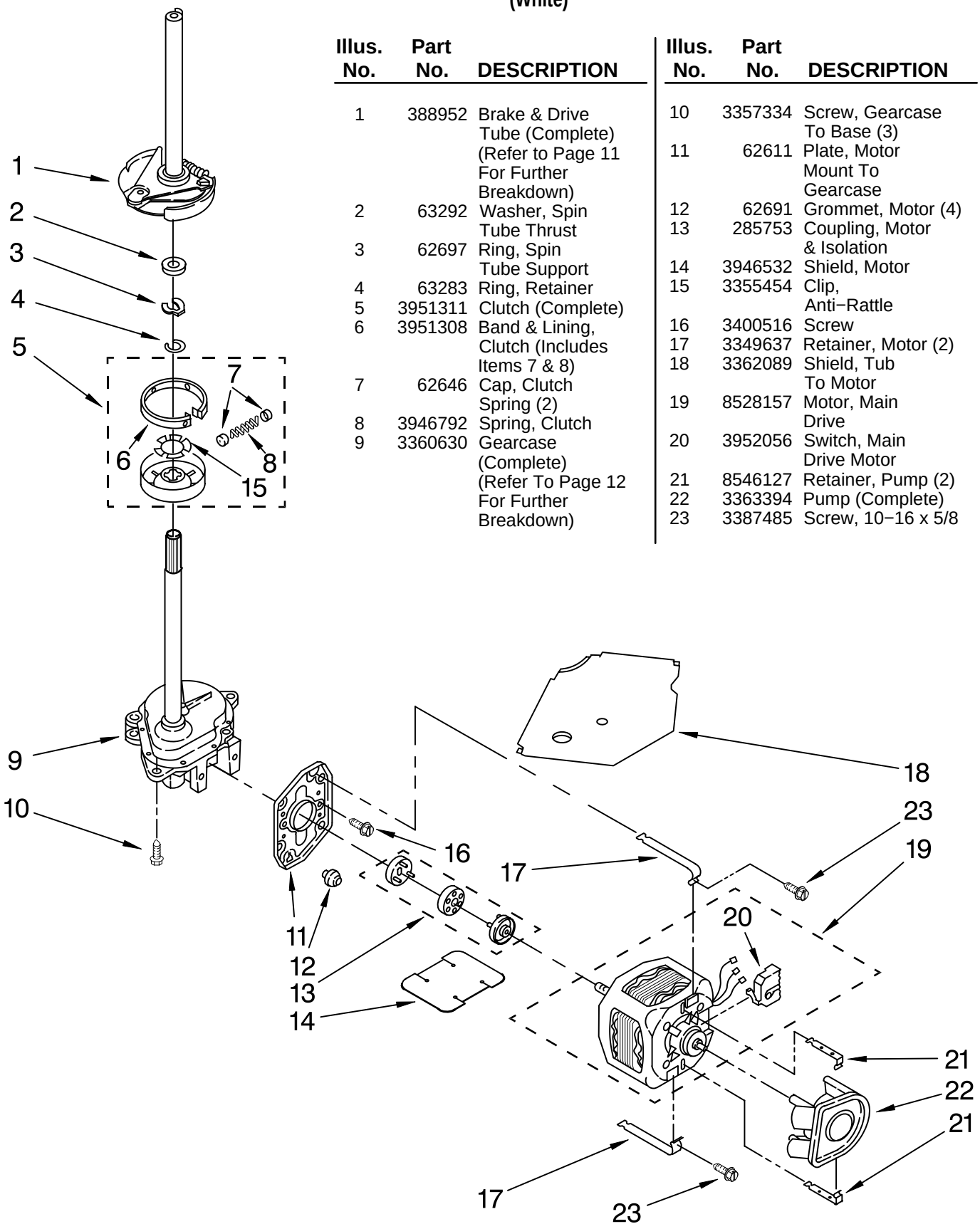

Illus. No.	Part No.	DESCRIPTION
1	388952	Brake & Drive Tube (Complete) (Refer to Page 11 For Further Breakdown)
2	63292	Washer, Spin Tube Thrust
3	62697	Ring, Spin Tube Support
4	63283	Ring, Retainer
5	3951311	Clutch (Complete)
6	3951308	Band & Lining, Clutch (Includes Items 7 & 8)
7	62646	Cap, Clutch Spring (2)
8	3946792	Spring, Clutch
9	3360630	Gearcase (Complete) (Refer To Page 12 For Further Breakdown)

Illus. No.	Part No.	DESCRIPTION
10	3357334	Screw, Gearcase To Base (3)
11	62611	Plate, Motor Mount To Gearcase
12	62691	Grommet, Motor (4)
13	285753	Coupling, Motor & Isolation
14	3946532	Shield, Motor
15	3355454	Clip, Anti−Rattle
16	3400516	Screw
17	3349637	Retainer, Motor (2)
18	3362089	Shield, Tub To Motor
19	8528157	Motor, Main Drive
20	3952056	Switch, Main Drive Motor
21	8546127	Retainer, Pump (2)
22	3363394	Pump (Complete)
23	3387485	Screw, 10−16 x 5/8

FOR ORDERING INFORMATION REFER TO PARTS PRICE LIST

MACHINE BASE PARTS

For Model: WTW5300SQ0
(White)

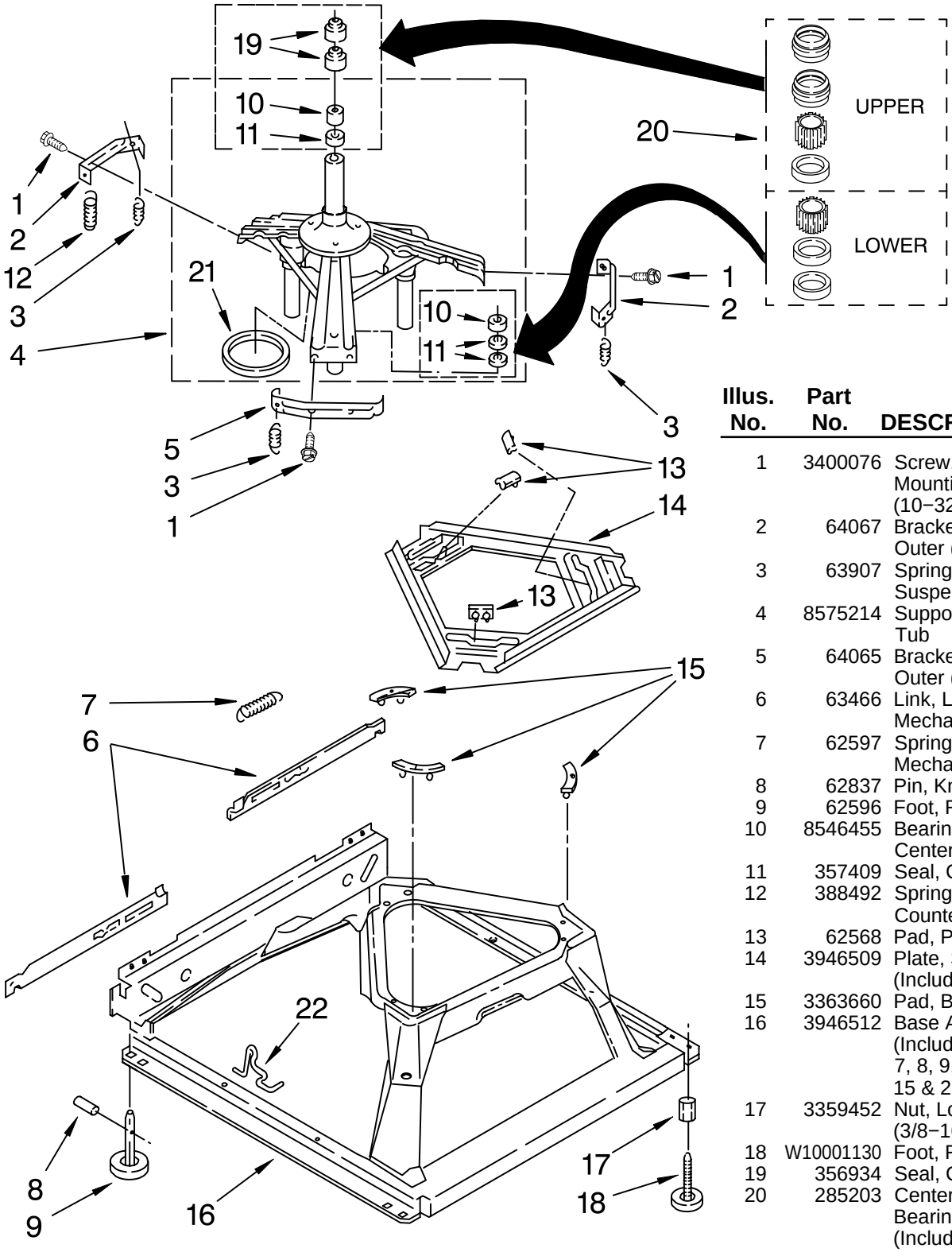

Illus. No.	Part No.	DESCRIPTION
1	3400076	Screw, Bracket Mounting (10−32 x 5/8)
2	64067	Bracket, Spring Outer (2)
3	63907	Spring Suspension,(3)
4	8575214	Support & Brake, Tub
5	64065	Bracket, Spring Outer (L.F.)
6	63466	Link, Leveling Mechanism (2)
7	62597	Spring, Leveling Mechanism
8	62837	Pin, Knurled
9	62596	Foot, Rear (2)
10	8546455	Bearing, Centerpost (2)
11	357409	Seal, Centerpost (3)
12	388492	Spring, Counterweight
13	62568	Pad, Plate
14	3946509	Plate, Suspension (Includes Item 13)
15	3363660	Pad, Base
16	3946512	Base Assembly (Includes Items 6, 7, 8, 9, 13, 14, 15 & 22)
17	3359452	Nut, Lock (2) (3/8−16)
18	W10001130	Foot, Front (2)
19	356934	Seal, Centerpost
20	285203	Centerpost Bearing Kit (Includes Items 10, 11 & 19)
21	63134	Ring, Sound Deadening
22	63806	Retainer, Suspension Spring

FOR ORDERING INFORMATION REFER TO PARTS PRICE LIST

WIRING HARNESS PARTS

For Model: WTW5300SQ0
(White)

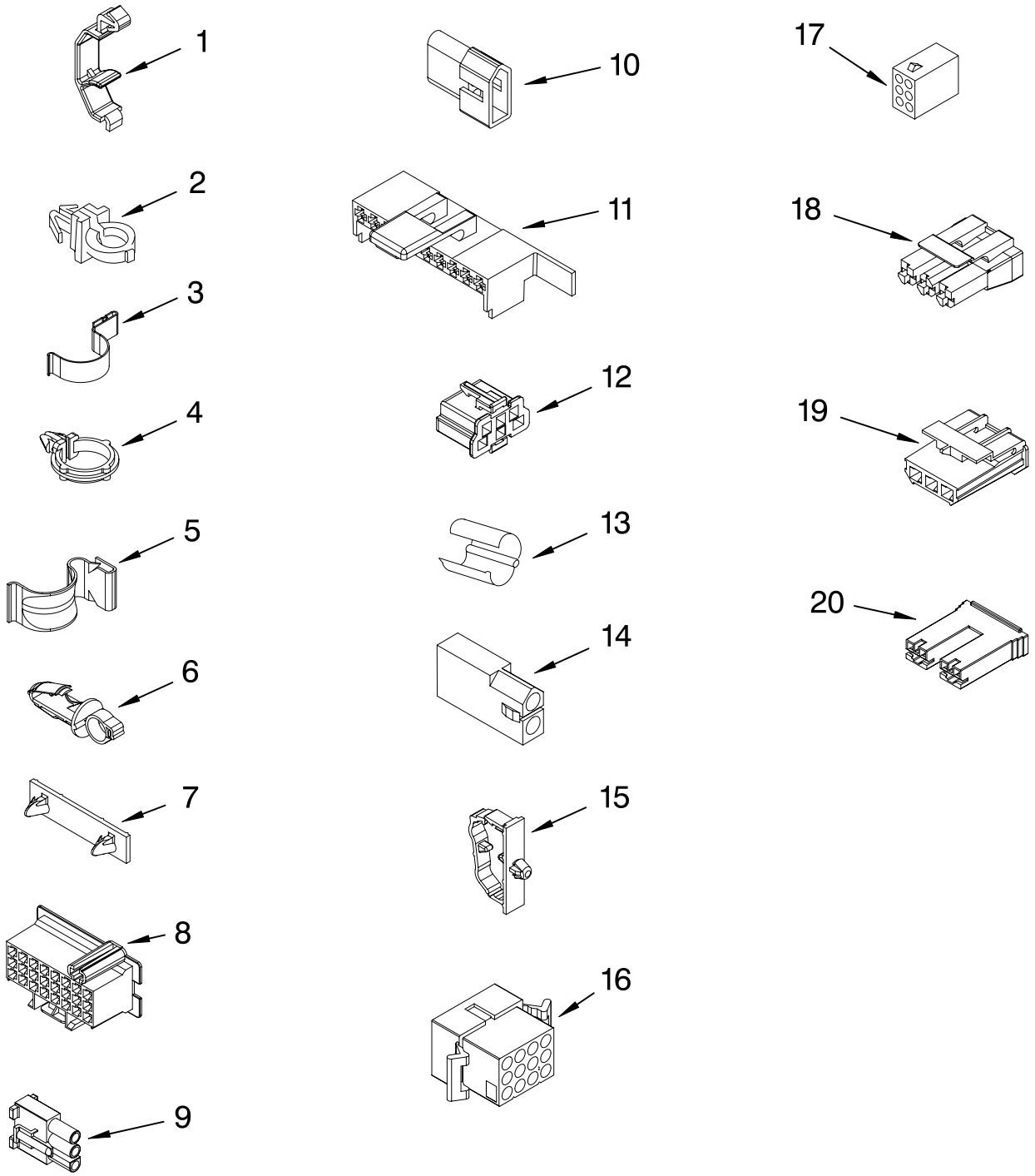

WH2J

FOR ORDERING INFORMATION REFER TO PARTS PRICE LIST

WIRING HARNESS PARTS

For Model: WTW5300SQ0
(White)

Illus. No.	Part No.	DESCRIPTION
1	3349557	Retainer, Harness
2	388498	Clip, Harness
3	3347812	Clip, Harness
4	3352501	Clip, Harness (Push−In)
5	90016	Clip, Harness (Half−Harness)
6	3390496	Clip, Harness
7	389379	Retainer, Harness
8		Timer, Block Disconnect
	3948614	Natural
	352089	Black
9	62889	Receptacle, Terminal (3−Way)
10	353424	Plug, Terminal (3−Way)
11	62505	Block, Disconnect (Motor 2 Speed)
12	3347243	Block, Disconnect
13	63523	Protector
14	717252	Connector (2−Way)
15	3352944	Clip, Harness
16	3390423	Block, Disconnect (12−Way)
17	3347730	Receptacle (6−Way)
18	3948617	Connector (T.P.A.) (3−Circuit)
19	3360056	Plug (T.P.A) (3−Circuit) (Pressure Switch)
20		Block, Connector
	3354925	Natural
	3354926	Red

FOR COMPLETE WIRING HARNESS REFER TO CONTROL AND REAR PANEL PARTS PAGE

WH2J

BRAKE AND DRIVE TUBE PARTS

For Model: WTW5300SQ0
(White)

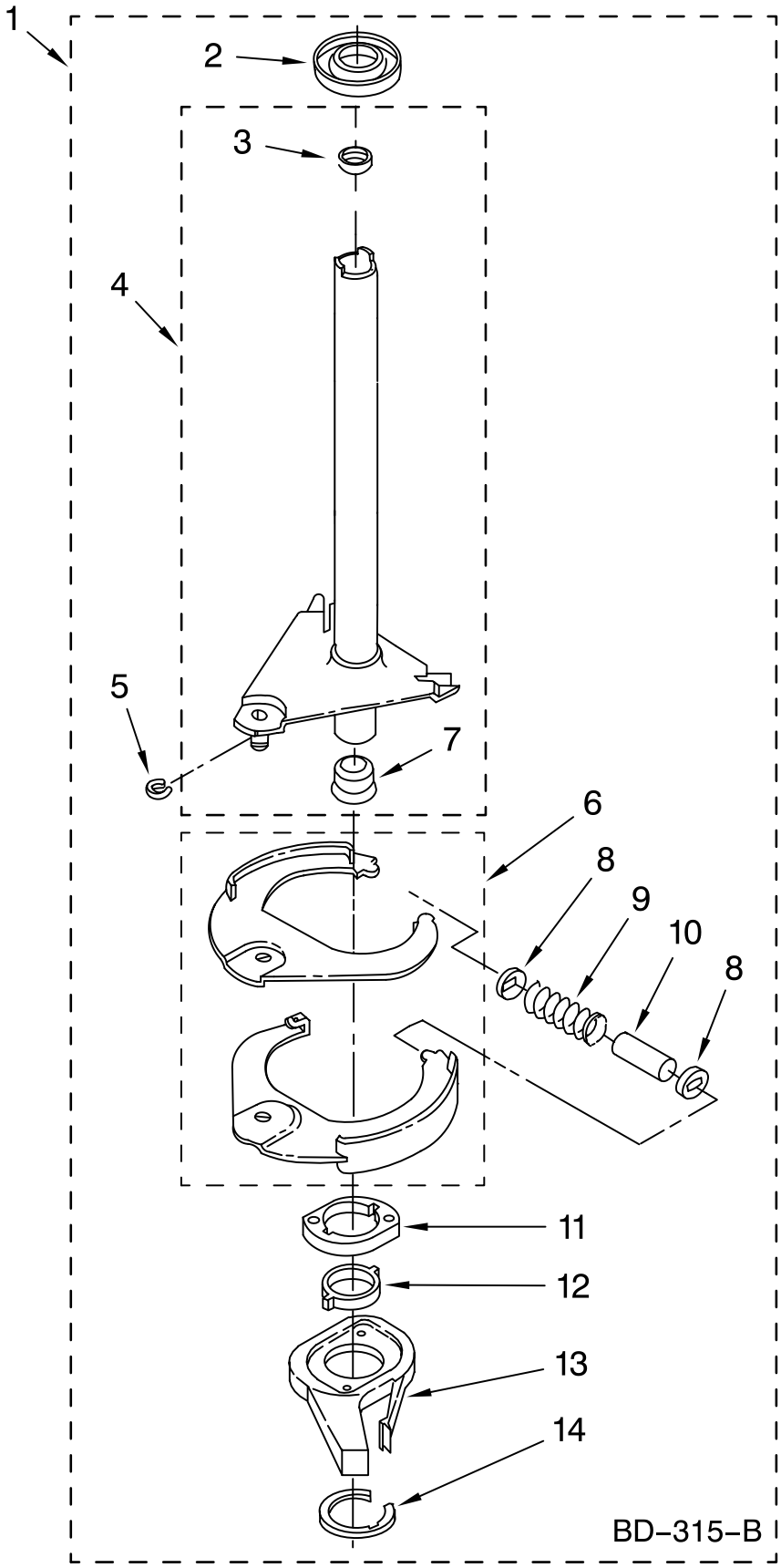

Illus. No.	Part No.	DESCRIPTION
1	388952	Brake And Drive Tube (Complete)
2	62658	Ring, Thrust
3	356427	Seal, Drive Tube
4	64027	Tube, Basket Drive (Includes Illus. 3, 4, 5 & 9)
5	64035	Ring, Retaining
6	64232	Shoe, Brake (2)
7	62703	"T" Bearing, Spin Tube
8	3353956	Cap, Brake Spring (2)
9	387806	Spring, Brake
10	3355360	Sleeve, Brake Spring
11	661516	Cam, Brake Release
12	63022	Sleeve, Cam
13	64194	Driver, Brake Cam
14	90368	Ring, Retaining

FOLLOWING PARTS NOT ILLUSTRATED

	285208	Lubricant (Use Only In Brake Shoe Assembly On Roller & Pin)

FOR ORDERING INFORMATION REFER TO PARTS PRICE LIST

GEARCASE PARTS

For Model: WTW5300SQ0
(White)

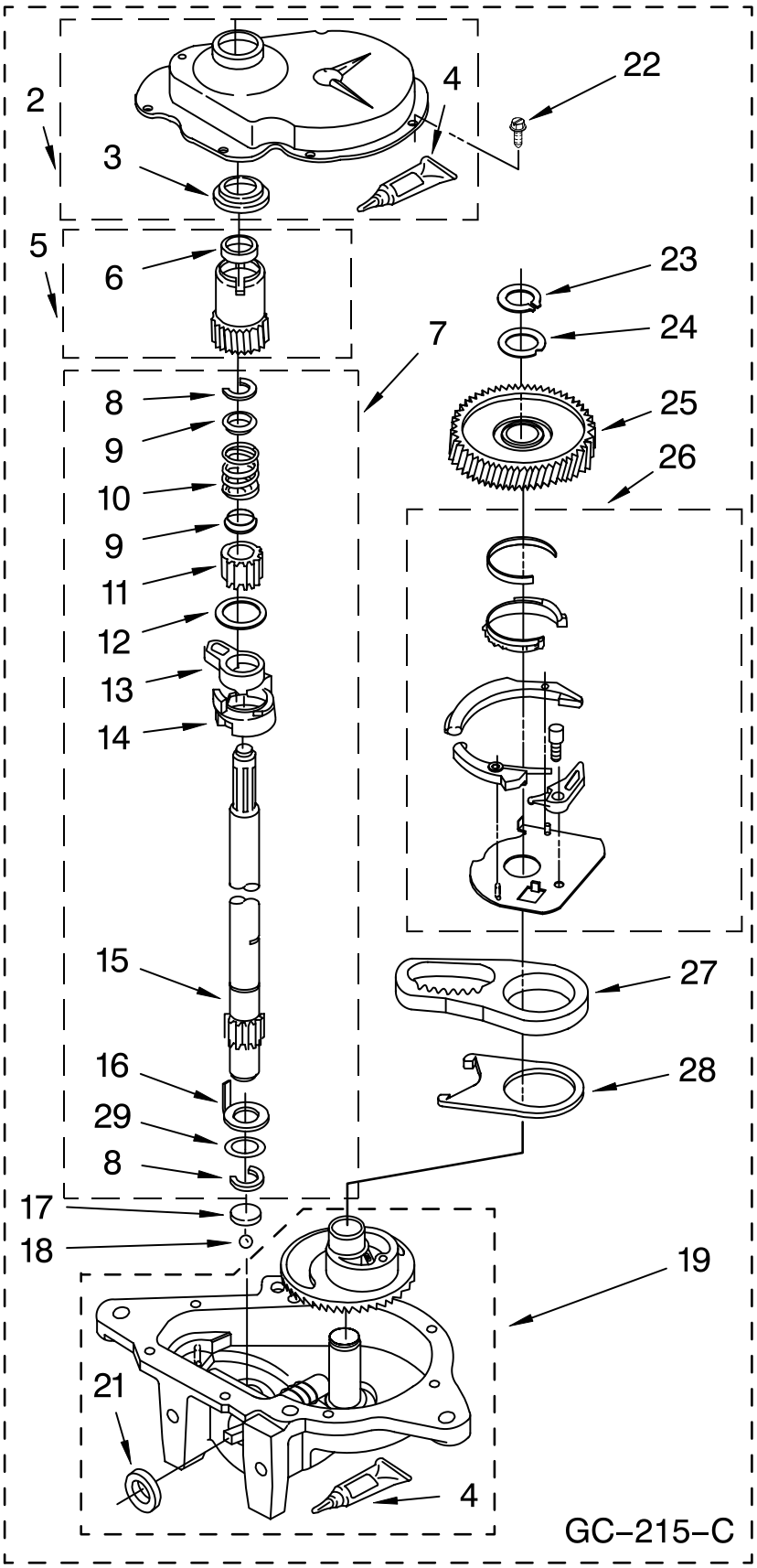

Illus. No.	Part No.	DESCRIPTION
1	3360630	Gearcase (Complete)
2	285202	Cover, Gearcase
3	3349985	Seal, Gearcase Cover
4	285195	Sealer, Gasket (.20 Fl. Oz.) (6 ml)
5	63320	Pinion, Spin (Includes Illus. 25)
6	356427	Seal, Spin Pinion
7	389387	Shaft, Agitator (Complete)
8	90369	Ring, Retaining (2)
9	62677	Retainer, Spring
10	62676	Spring, Agitate
11	63273	Gear, Agitate (Includes 15 and 29)
12	62619	Washer, Agitate Gear
13	62580	Cam Follower (Includes 14)
14	62581	Cam, Agitate (Includes 13)
15	285509	Shaft, Agitator (Includes 11 and 29)
16	62618	Washer, Cam Thrust
17	16018	Bearing, Thrust
18	85529	Ball, Bearing
19	389230	Bottom and Pinion, Gearcase
21	285352	Seal, Thrust Plug
22	3351614	Screw, Gearcase Cover, Mounting (8) (10−24 x 3/8)
23	3362552	Ring, Retaining
24	285735	Washer Kit, Thrust
25	62570	Gear, Spin
26	388253	Neutral Assembly
27	3349296	Rack, Connecting
28	62621	Actuator, Shift
29	388815	Washer, Intermediate

FOR ORDERING INFORMATION REFER TO PARTS PRICE LIST

OPTIONAL PARTS (NOT INCLUDED)

For Model: WTW5300SQ0
(White)

Illus. No.	Part No.	DESCRIPTION
		PAINT, TOUCH−UP (1/2oz.)
	72017	White
		PAINT, PRESSURIZED SPRAY (12 oz.)
	350938	Primer, Gray
	350930	White
		PAINT, BULK (1 qt.)
	799344	White (Uncut)
		OIL
	350572	Oil, Gearcase (16 Oz.)
		LUBRICANT
	285208	Lubricant (Use Only in Brake Shoe Assembly On Roller and Pin)
		SEALER
	285195	Sealer, Gasket (.20 Fl. Oz.) (6 ml)
		ACCESSORY PARTS
	63580	Fabric Dispenser
	367031	Drain Protector
	280129	Siphon Break Kit
	280130	Drain Hose Adapter Kit
	280131	Drain Hose Extension Kit

FOR ORDERING INFORMATION REFER TO PARTS PRICE LIST